UNIT-II
Memory Management

Characteristics of Memory System, The memory hierarchy.

Cache Memory- Cache memory principles, Elements of cache design cache address, size, and mapping functions. Replacement algorithms, write policy, line size, number of cache, one level and two level cache. Performance characteristics of two level cache- locality & operations. Internal Memory- semiconductor main memory, advanced DRAM organization. External Memory Hard Disk organization. RAID- level 1 to level 6.

Case Study : Memory Management in ATMs

Computer memory system

Computer memory is the hardware component that stores data, instructions, and information for immediate or future use. It includes both temporary (volatile) and permanent (non-volatile) storage.

Main Types of Computer Memory System

1. **Primary Memory (Main Memory) :**Used directly by the CPU.

(a) RAM – Random Access Memory

- Volatile (loses data when power is off)
- Stores data and instructions currently being used
- Fast and directly accessible

(b) ROM – Read Only Memory

- Non-volatile
- Contains permanent instructions (e.g., BIOS)
- Used for booting the system

2. Secondary Memory (External / Auxiliary Memory): Used to store data permanently.

Examples:

- Hard Disk Drives (HDD)
- Solid State Drives (SSD)
- USB Flash Drives
- Memory Cards
- Optical Discs (CD/DVD)

Characteristics:

- Non-volatile
- Larger storage capacity
- Slower than primary memory

3. Cache Memory

- High-speed, small-sized memory located between CPU and RAM
- Stores frequently used instructions
- Increases processing speed

4. Registers

Very small, extremely fast memory inside the CPU

Stores data being processed at that moment

Characteristics of memory system

A memory system is characterized by it’s:

1. Location (processor, internal, or external)
2. Capacity (expressed in words or bytes)
3. Unit of transfer (word or block)
4. Access method (sequential, direct, or random)
5. Volatility (whether it retains data without power)
6. Performance (speed and access time)
7. Organization (how data is arranged)

Key characteristics:

1. **Location:**

   - **Processor memory:** Registers located directly within the processor.
   - **Internal memory:** Main memory, such as RAM and cache, located inside the computer but outside the processor.
   - **External memory:** Peripheral storage devices like hard drives and tapes connected to the processor via I/O controllers.

2. **Capacity:** The amount of data the memory can hold, typically measured in bits, bytes, or words.

3. **Unit of transfer:** The amount of data that can be read from or written to the memory at one time.
   This is a word for internal memory but a block for external memory.

4. Access method: How the memory is accessed.

- **Direct access:** Each location can be accessed directly, but not in a fixed time (e.g., RAM).
- **Sequential access:** Data must be read in order, one after another (e.g., magnetic tape).
- **Random access:** Any location can be accessed directly in roughly the same amount of time (e.g., RAM, disk drives).

5. Physical characteristics:

- **Volatility:** Volatile memory (like RAM) loses data when power is turned off, while non-volatile memory (like ROM and hard drives) retains data.
- **Performance:** Includes factors like access time, access rate, and transfer rate.
- **Physical type:** The physical technology used to build the memory, such as magnetic, semiconductor, or optical.

6. Organization: How the memory is organized, such as by addressable units like words or sectors, and how these units are physically arranged.

Memory Hierarchy Design and its Characteristics

- In the Computer System Design, Memory Hierarchy is an enhancement to organize the memory such that it can minimize the access time.
- The Memory Hierarchy was developed based on a program behavior known as locality of references (same data or nearby data is likely to be accessed again and again). The figure below clearly demonstrates the different levels of the memory hierarchy.

Why Memory Hierarchy is Required in the System?

- Memory Hierarchy helps in optimizing the memory available in the computer.
- There are multiple levels present in the memory, each one having a different size, different cost, etc.
- Some types of memory like cache, and main memory are faster as compared to other types of memory but they are having a little less size and are also costly
- whereas some memory has a little higher storage value, but they are a little slower.
- Accessing of data is not similar in all types of memory, some have faster access whereas some have slower access.

Types of Memory Hierarchy

This Memory Hierarchy Design is divided into 2 main types:

- **External Memory or Secondary Memory:** Comprising of Magnetic Disk, Optical Disk, and Magnetic Tape i.e. peripheral storage devices which are accessible by the processor via an I/O Module.

- **Internal Memory or Primary Memory:** Comprising of Main Memory, Cache Memory & CPU registers. This is directly accessible by the processor.

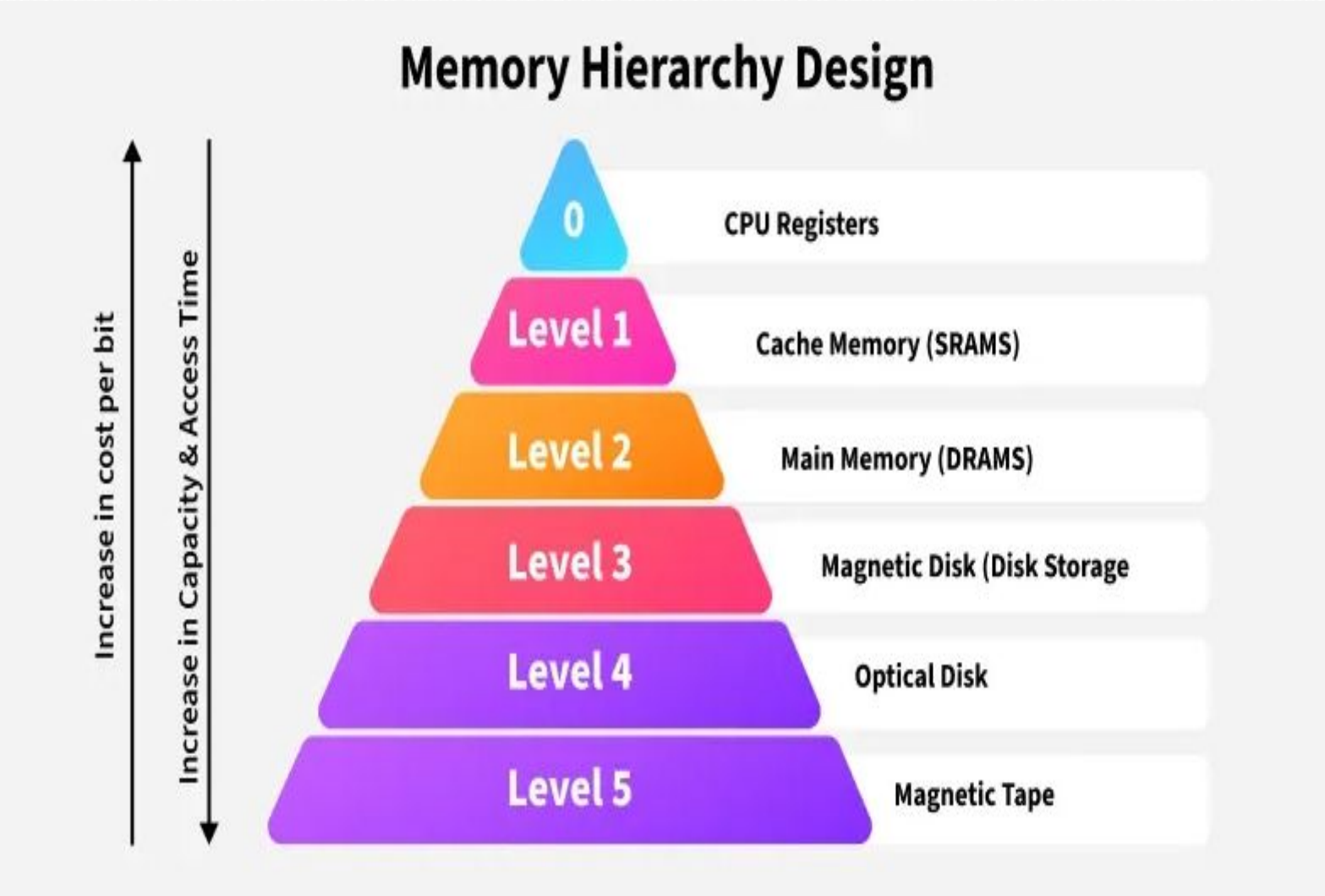
Memory Hierarchy Design
Increase in cost per bit
Increase in Capacity & Access Time
0
CPU Registers
Level 1
Cache Memory (SRAMS)
Level 2
Main Memory (DRAMS)
Level 3
Magnetic Disk (Disk Storage
Level 4
Optical Disk
Level 5
Magnetic Tape

Memory Hierarchy Design

1. Registers:

- Registers are small, high-speed memory units located in the CPU.
- They are used to store the most frequently used data and instructions.
- Registers have the fastest access time and the smallest storage capacity, typically ranging from 16 to 64 bits.

2. Cache Memory:

- Cache memory is a small, fast memory unit located close to the CPU.
- It stores frequently used data and instructions that have been recently accessed from the main memory.
- Cache memory is designed to minimize the time it takes to access data by providing the CPU with quick access to frequently used data.

3. Main Memory:

Main memory, also known as RAM (Random Access Memory), is the primary memory of a computer system. It has a larger storage capacity than cache memory, but it is slower. Main memory is used to store data and instructions that are currently in use by the CPU.

Types of Main Memory:

•**Static RAM:** Static RAM stores the binary information in flip flops and information remains valid until power is supplied. Static RAM has a faster access time and is used in implementing cache memory.

•**Dynamic RAM:** It stores the binary information as a charge on the capacitor. It requires refreshing circuitry to maintain the charge on the capacitors after a few milliseconds. It contains more memory cells per unit area as compared to SRAM.

4. Secondary Storage:

- Secondary storage, such as hard disk drives (HDD) and solid-state drives (SSD) , is a non- volatile memory unit that has a larger storage capacity than main memory.
- It is used to store data and instructions that are not currently in use by the CPU.
- Secondary storage has the slowest access time and is typically the least expensive type of memory in the memory hierarchy.

5. Magnetic Disk:

- Magnetic Disks are simply circular plates that are fabricated with either a metal or a plastic or a magnetized material.
- The Magnetic disks work at a high speed inside the computer and these are frequently used.

6. Magnetic Tape:

- Magnetic Tape is simply a magnetic recording device that is covered with a plastic film.
- Magnetic Tape is generally used for the backup of data.
- In the case of a magnetic tape, the access time for a computer is a little slower and therefore, it requires some amount of time for accessing the strip.

Characteristics of Memory Hierarchy

- **Capacity:** It is the global volume of information the memory can store. As we move from top to bottom in the Hierarchy, the capacity increases.

- **Access Time:** It is the time interval between the read/write request and the availability of the data. As we move from top to bottom in the Hierarchy, the access time increases.

- **Performance:** The Memory Hierarch design ensures that frequently accessed data is stored in faster memory to improve system performance.

- **Cost Per Bit:** As we move from bottom to top in the Hierarchy, the cost per bit increases i.e. Internal Memory is costlier than External Memory.

System-Supported Memory Standards

Level	1	2	3	4
Name	Register	Cache	Main Memory	Secondary Memory
Size	<1 KB	less than 16 MB	<16GB	>100 GB
Implementation	Multi-ports	On-chip/SRAM	DRAM(capacitor memory)	Magnetic
Access Time	0.25ns to 0.5ns	0.5 to 25ns	80 ns to 250ns	50 lakh ns
Bandwidth	20000 to 1 lakh MB	5000 to 15000	1000 to 5000	20 to 150
Manage by	Compiler	Hardware	Operating System	Operating System
Backing Mechanism	From cache	from Main Memory	from Secondary Memory	from ie

Advantages of Memory Hierarchy

- **Performance:** Frequently used data is stored in faster memory (like cache), reducing access time and improving overall system performance.

- **Cost Efficiency:** By combining small, fast memory (like registers and cache) with larger, slower memory (like RAM and HDD), the system achieves a balance between cost and performance. It saves the consumer's price and time.

- **Optimized Resource Utilization:** Combines the benefits of small, fast memory and large, cost-effective storage to maximize system performance.

- **Efficient Data Management:** Frequently accessed data is kept closer to the CPU, while less frequently used data is stored in larger, slower memory, ensuring efficient data handling.

Disadvantages of Memory Hierarchy

- **Complex Design:** Managing and coordinating data across different levels of the hierarchy adds complexity to the system's design and operation.

- **Cost:** Faster memory components like registers and cache are expensive, limiting their size and increasing the overall cost of the system.

- **Latency:** Accessing data stored in slower memory (like secondary or tertiary storage) increases the latency and reduces system performance.

- **Maintenance Overhead:** Managing and maintaining different types of memory adds overhead in terms of hardware and software.

CACHE MEMORY

- Cache memory is the fast and small memory placed between processor & main memory.
- The basic idea of using a cache is simple. When CPU need a word, it first looks in the cache. Only if the word is not there does it go to main memory.

- **Characteristics of Cache Memory**
- Extremely fast memory type that acts as a buffer between RAM and the CPU.
- Holds frequently requested data and instructions, ensuring that they are immediately available to the CPU when needed.
- Costlier than main memory or disk memory but more economical than CPU registers.
- Used to speed up processing and synchronize with the high-speed CPU.

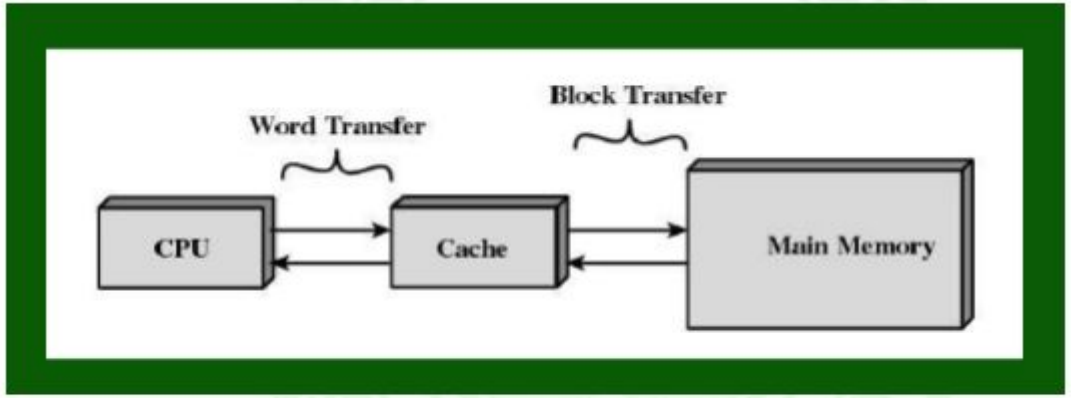

Fig: Single Cache

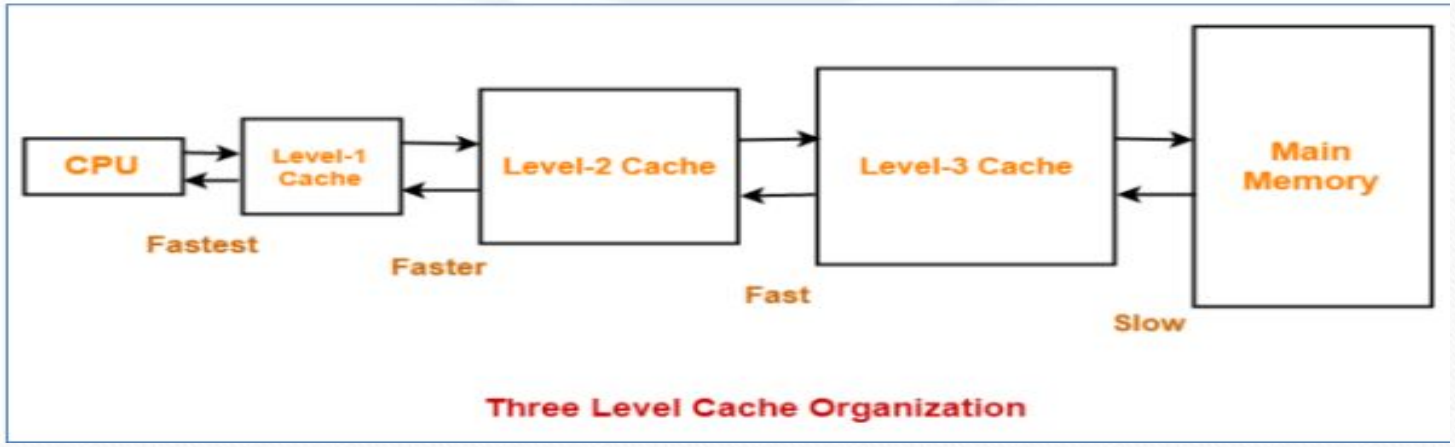

Three Level Cache Organization

- The rate at which the processor can execute instructions is clearly limited by the memory cycle time (the time it takes to read one word from or write one word to memory).
- This limitation has been a significant problem because of the persistent mismatch between processor and main memory speeds.
- Over the years, processor speed has consistently increased more rapidly than memory access speed.
- We are faced with a trade-off among speed, cost, and size.
- Ideally, main memory should be built with the same technology as that of the processor registers, giving memory cycle times comparable to processor cycle times.
- This has always been too expensive a strategy. The solution is to exploit the principle of locality by providing a small, fast memory between the processor and main memory, namely the cache

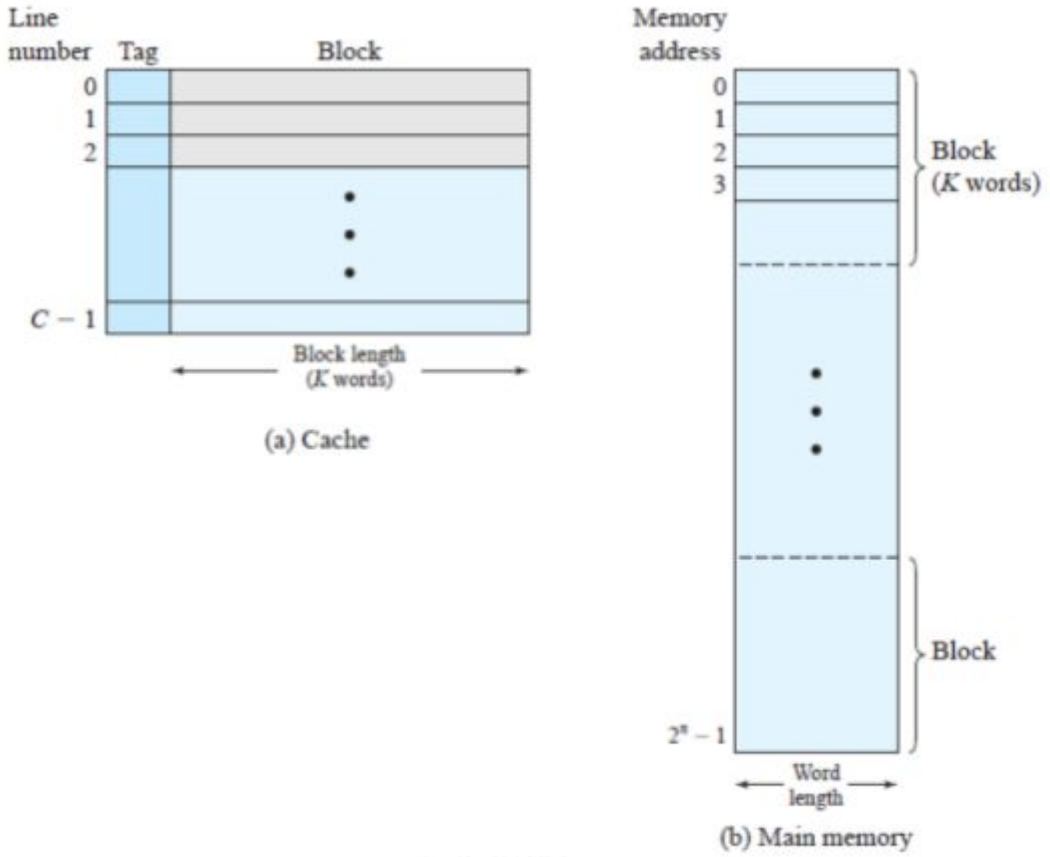

Cache / Main memory

Fig : Cache - Main Memory Structure

Cache Principles

- The cache contains a copy of a portion of main memory.
- When the processor attempts to read a byte or word of memory, a check is made to determine if the byte or word is in the cache.
- If so, the byte or word is delivered to the processor. (CACHE HIT) If not, a block of main memory, consisting of some fixed number of bytes, is read into the cache and then the byte or word is delivered to the processor. (CACHE MISS)
- The use of multiple levels of cache: The L2 cache is slower and typically larger than the L1 cache, and the L3 cache is slower and typically larger than the L2 cache. Following Figure depicts the structure of a cache/main memory system.
- Main memory consists of up to 2n addressable words, with each word having a unique n –bit address.
- This memory is considered to consist of a number of fixed-length blocks of K words each. That is, there are M= 2n /K blocks.
- Cache consists of C slots (also referred to as lines) of K words each, and the number of slots is considerably less than the number of main memory blocks (C<<< much less than)

- If a word in a block of memory that is not in the cache is read, that block is transferred to one of the slots of the cache.
- Each slot includes a tag that identifies which particular block is currently being stored.
- The tag is usually some number of higher-order bits of the address and refers to all addresses that begin with that sequence of bits.
- As a simple example, suppose that we have a 6-bit address and a 2-bit tag.
- The tag 01 refers to the block of locations with the following addresses: 010000, 010001, 010010, 010011, 010100, 010101, 010110, 010111, 011000, 011001, 011010, 011011, 011100, 011101, 011110, 011111.